Pearson Edexcel

iPrimary

MATHEMATICS

SAMPLE ASSESSMENT MATERIALS

Pearson Edexcel International Award in Primary Mathematics (JMA11)
For first teaching September 2018
First examination June 2019
Issue 1

Edexcel, BTEC and LCCI qualifications

Edexcel, BTEC and LCCI qualifications are awarded by Pearson, the UK's largest awarding body offering academic and vocational qualifications that are globally recognised and benchmarked. For further information, please visit our qualification website at qualifications.pearson.com. Alternatively, you can get in touch with us using the details on our contact us page at qualifications.pearson.com/contactus

About Pearson

Pearson is the world's leading learning company, with 35,000 employees in more than 70 countries working to help people of all ages to make measurable progress in their lives through learning. We put the learner at the centre of everything we do, because wherever learning flourishes, so do people. Find out more about how we can help you and your learners at qualifications.pearson.com

References to third party material made in this sample assessment materials are made in good faith. Pearson does not endorse, approve or accept responsibility for the content of materials, which may be subject to change, or any opinions expressed therein. (Material may include textbooks, journals, magazines and other publications and websites.)

All information in this document is correct at time of publication.

ISBN 978 1 4469 5231 3

Contents

Introduction

The Pearson Edexcel International Award in Primary Mathematics is designed for use in international schools. It is part of a suite of *iPrimary* qualifications offered by Pearson.

These sample assessment materials have been developed to support this qualification and will be used as the benchmark to develop the assessment students will take.

General marking guidance

- All candidates must receive the same treatment. Examiners must mark the last candidate in exactly the same way as they mark the first.
- Mark schemes should be applied positively. Candidates must be rewarded for what they have shown they can do rather than be penalised for omissions.
- Examiners should mark according to the mark scheme – not according to their perception of where the grade boundaries may lie.
- All the marks on the mark scheme are designed to be awarded. Examiners should always award full marks if deserved, i.e. if the answer matches the mark scheme. Examiners should also be prepared to award zero marks if the candidate's response is not worthy of credit according to the mark scheme.
- Where some judgement is required, mark schemes will provide the principles by which marks will be awarded and exemplification/indicative content will not be exhaustive. However different examples of responses will be provided at standardisation.
- When examiners are in doubt regarding the application of the mark scheme to a candidate's response, a senior examiner must be consulted before a mark is given.
- Crossed-out work should be marked **unless** the candidate has replaced it with an alternative response.

Specific guidance for mathematics

1. These mark schemes use the following types of marks:
   - **M** marks: Method marks are awarded for 'knowing a method and attempting to apply it', unless otherwise indicated.
   - **A** marks: Accuracy marks can only be awarded if the relevant method (M) marks have been earned.
   - **B** marks are unconditional accuracy marks (independent of M marks)

2. Abbreviations

   These are some of the traditional marking abbreviations that may appear in the mark schemes.

   - **ft** follow through
   - $\sqrt{\ }$ this symbol is used for correct ft
   - **cao** correct answer only
   - **cso** correct solution only. There must be no errors in this part of the question to obtain this mark
   - **isw** ignore subsequent working
   - **o.e.** or equivalent (and appropriate)
   - **d...** dependent or **dep**
   - **dp** decimal places
   - **sf** significant figures
   - **awrt** answers which round to

3. If a candidate makes more than one attempt at any question:
   - If all but one attempt is crossed out, mark the attempt which is NOT crossed out.
   - If either all attempts are crossed out or none are crossed out, mark all the attempts and score the highest single attempt.

Please check the examination details below before entering your candidate information

Candidate surname	Other names

Pearson Edexcel International Award in Primary

Centre Number | Candidate Number

Sample Assessment Material for first teaching September 2018

Time: 1 hour | **Paper Reference** JMA11/01

Mathematics

Achievement test

You must have:
Ruler, pen, pencil, eraser, angle measurer.

Total Marks

Instructions

- Use **black** ink or ball-point pen.
- **Fill in the boxes** at the top of this page with your name, centre number and candidate number.
- Answer **all** questions.
- Answer the questions in the spaces provided – *there may be more space than you need.*
- **Calculators are NOT allowed.**
- You must **show all your working out** with **your answer clearly identified** at the **end of your solution**.

Information

- The total mark for this paper is 60.
- The marks for **each** question are shown in brackets – *use this as a guide as to how much time to spend on each question.*

Advice

- Read each question carefully before you start to answer it.
- Try to answer every question.
- Check your answers if you have time at the end.

Turn over

S59816A

1/1/1/1/1/1/1/1/

S 5 9 8 1 6 A 0 1 3 2

Pearson

SECTION A

Answer ALL questions.

In Section A put a cross in each correct box ☒ to indicate your answer. If you change your mind, put a line through the box ☒ and then put a cross in another box ☒.

1 What is 5 m equal to?

50 mm	500 mm	50 cm	500 cm
☐	☐	☐	☐
A	**B**	**C**	**D**

(Total for Question 1 is 1 mark)

2 Work out

$$84 \div 12$$

7	9	42	72
☐	☐	☐	☐
A	**B**	**C**	**D**

(Total for Question 2 is 1 mark)

3 What is $\frac{1}{6}$ of 48?

6	8	12	16
☒	☒	☒	☒
A	**B**	**C**	**D**

(Total for Question 3 is 1 mark)

4 What is the name of this shape?

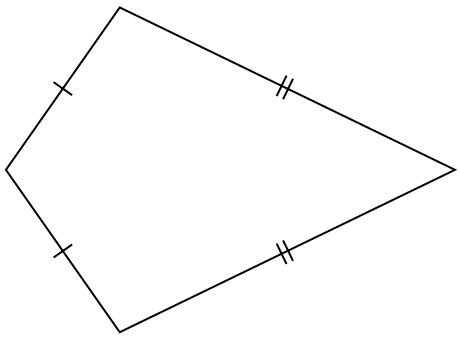

Kite	Parallelogram	Rectangle	Rhombus
☒	☒	☒	☒
A	**B**	**C**	**D**

(Total for Question 4 is 1 mark)

5 A timetable for Bus A and Bus B is shown.

	Bus A	Bus B
shops	2:34	2:45
park	2:41	2:51
school	2:47	2:55
hospital	2:53	3:03

Ahmed gets on Bus B at the shops.

What time will Ahmed get to the school?

2:47	2:53	2:55	3:03
☒	☒	☒	☒
A	**B**	**C**	**D**

(Total for Question 5 is 1 mark)

6 What does the digit 5 represent in the number 253 641?

hundreds	hundreds of thousands	tens of thousands	thousands
☒	☒	☒	☒
A	**B**	**C**	**D**

(Total for Question 6 is 1 mark)

7 Work out

$$14 + 4 \times 6 - 2$$

30	36	72	106
☒	☒	☒	☒
A	**B**	**C**	**D**

(Total for Question 7 is 1 mark)

8 The marks for some students in their English test are shown.

12 7 15 12 9

What is the mean mark?

8	11	12	15
☒	☒	☒	☒
A	**B**	**C**	**D**

(Total for Question 8 is 1 mark)

9 Here is a sorting table.

	Multiple of 3	Not a multiple of 3
Multiple of 4	**A**	**B**
Not a multiple of 4	**C**	**D**

Which cell would 20 be in?

☒ **A** ☒ **B** ☒ **C** ☒ **D**

(Total for Question 9 is 1 mark)

10 What is the perimeter of this regular hexagon?

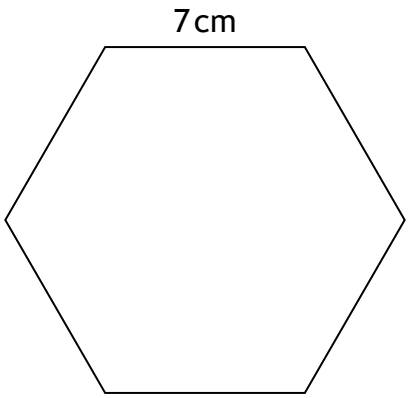

35 cm ☒ **A**

36 cm ☒ **B**

42 cm ☒ **C**

49 cm ☒ **D**

(Total for Question 10 is 1 mark)

11 Simplify the expression

$$4x + 5y + 3x - y$$

$7x + 5$	$13x$	$7x - 4y$	$7x + 4y$
☒	☒	☒	☒
A	**B**	**C**	**D**

(Total for Question 11 is 1 mark)

12 Which one of these is a square number?

15	39	81	132
☒	☒	☒	☒
A	**B**	**C**	**D**

(Total for Question 12 is 1 mark)

13 Alice has $20

She buys a book for $4.50 and a pen for $3.99

How much money does Alice have left?

$8.49	$11.51	$12.51	$16.01
☐	☐	☐	☐
A	**B**	**C**	**D**

(Total for Question 13 is 1 mark)

14 Find 30% of 60

6	18	20	180
☐	☐	☐	☐
A	**B**	**C**	**D**

(Total for Question 14 is 1 mark)

15 What is 354 rounded to the nearest hundred?

300	350	360	400
☐	☐	☐	☐
A	**B**	**C**	**D**

(Total for Question 15 is 1 mark)

16 Solve the equation

$$4x + 6 = 18$$

3	4	6	96
☐	☐	☐	☐
A	**B**	**C**	**D**

(Total for Question 16 is 1 mark)

17 A line has been drawn from the edge to the centre of a circle.

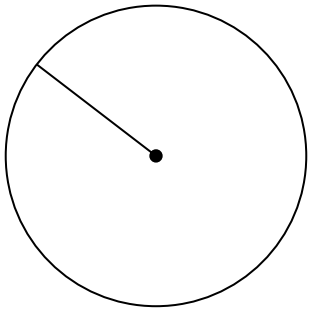

What is the name of this line?

Circumference	Diameter	Edge	Radius
☐	☐	☐	☐
A	**B**	**C**	**D**

(Total for Question 17 is 1 mark)

18 Work out

$$313 \div 5$$

$62\frac{2}{5}$	$62\frac{3}{5}$	$62\frac{5}{3}$	$62\frac{3}{13}$
☐	☐	☐	☐
A	**B**	**C**	**D**

(Total for Question 18 is 1 mark)

19 Which one of these statements is correct?

$124581 < 124571$	$157355 < 94382$	$184471 > 104383$	$137584 > 169421$
☐	☐	☐	☐
A	**B**	**C**	**D**

(Total for Question 19 is 1 mark)

20 Work out

$$\frac{11}{16} - \frac{5}{8}$$

$\frac{1}{2}$	$\frac{6}{16}$	$\frac{1}{16}$	$\frac{6}{8}$
☒	☒	☒	☒
A	**B**	**C**	**D**

(Total for Question 20 is 1 mark)

TOTAL FOR SECTION A IS 20 MARKS

SECTION B

Answer ALL questions.

21 (a) Work out

68 965 + 7 527

.....
(1)

(b) Work out

83 407 − 6 349

.....
(1)

(Total for Question 21 is 2 marks)

22 The students in a class completed a questionnaire of their favourite sports.

They presented their results in this pictogram.

Pictogram of favourite sports

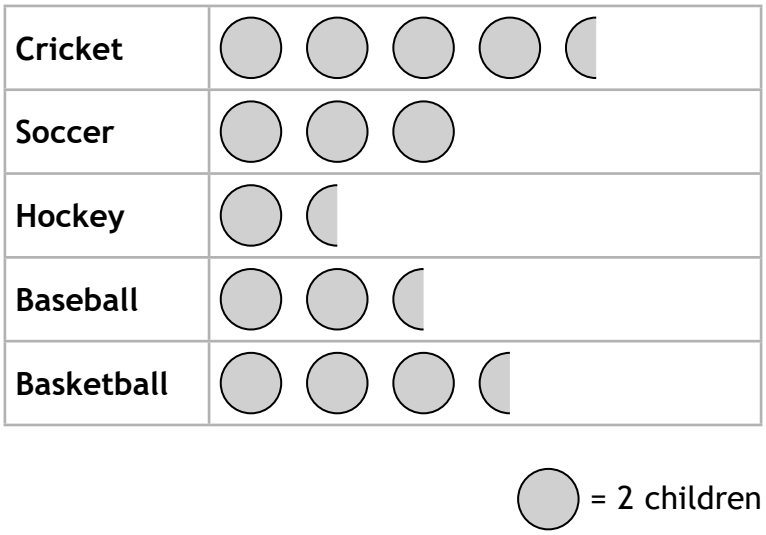

How many students chose basketball?

.....

(Total for Question 22 is 1 mark)

23 Sam and Jon have $250

They share the money in the ratio 3:2

Sam receives the most money.

How much money does Sam receive?

.....

(Total for Question 23 is 2 marks)

24 Here is a list of numbers.

1 2 3 4 6 8 12

(a) Write down all the numbers from the list that are factors of 8

.....
(1)

(b) Write down all the numbers from the list that are multiples of 3

.....
(1)

(Total for Question 24 is 2 marks)

25 (a) Using the correct notation, mark the parallel sides on this trapezium.

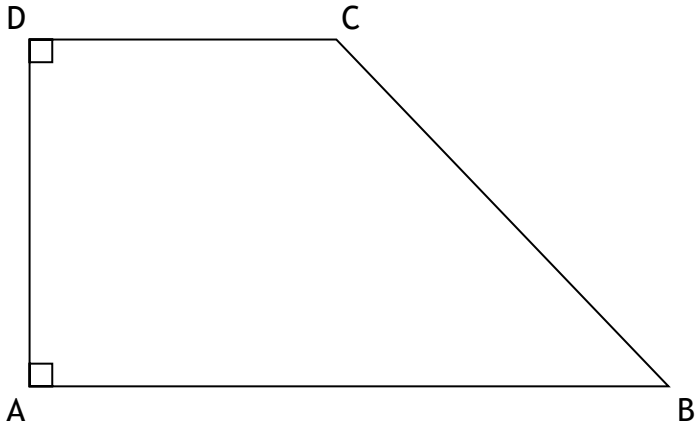

(2)

(b) Find the value of angle *x*

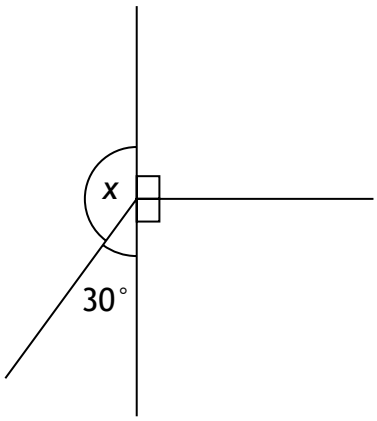

.....

(1)

(Total for Question 25 is 3 marks)

26 Complete this multiplication table.

×		8	6
	18	48	
	15		30

(Total for Question 26 is 2 marks)

27 Kay has a box of 20 pens.

$\frac{1}{4}$ of the pens are blue.

$\frac{3}{5}$ of the pens are black.

The rest of the pens are red.

(a) How many blue pens does Kay have?

.....
(1)

(b) How many black pens does Kay have?

.....
(1)

(Total for Question 27 is 2 marks)

28 120 students were asked to choose their favourite subject.

Their answers are displayed in this pie chart.

Favourite subject

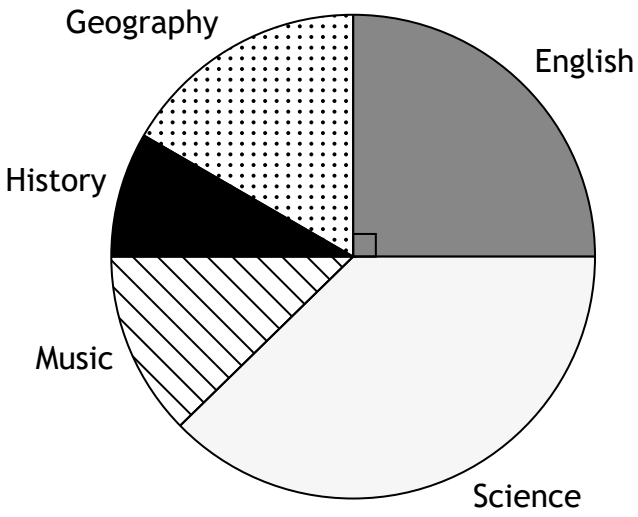

How many students chose English?

.....

(Total for Question 28 is 1 mark)

29 Complete the boxes to make these fractions equivalent.

(a) $\frac{2}{5} = \frac{\square}{10}$

(1)

(b) $\frac{2}{\square} = \frac{16}{24}$

(1)

(Total for Question 29 is 2 marks)

30 (a) Round 36.57 to the nearest whole number.

.....

(1)

(b) Here are four numbers.

3.05 3.5 5.3 0.53

Put these numbers in order, starting with the smallest.

....

smallest

(1)

(Total for Question 30 is 2 marks)

31 Anja and Jai are making some bread.

Anja has 1.25 kg of flour.

Jai has 850 g of flour.

How much flour do they have in total?

Give your answer in kilograms.

You must show your working.

..... kg

(Total for Question 31 is 2 marks)

32 R and S are two points plotted on this grid.

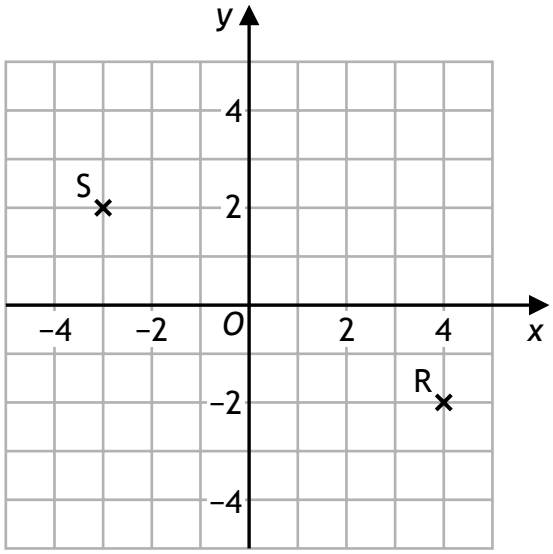

(a) What are the coordinates of point R?

.....
(1)

(b) What are the coordinates of point S?

.....
(1)

(Total for Question 32 is 2 marks)

33 Plant A was grown over a 10 week period.

The height for Plant A was measured and recorded every two weeks.

The table shows the measurements.

	Week 2	Week 4	Week 6	Week 8	Week 10
Plant A	2 cm	3 cm	5 cm	7 cm	8 cm

Construct a line graph for the data.

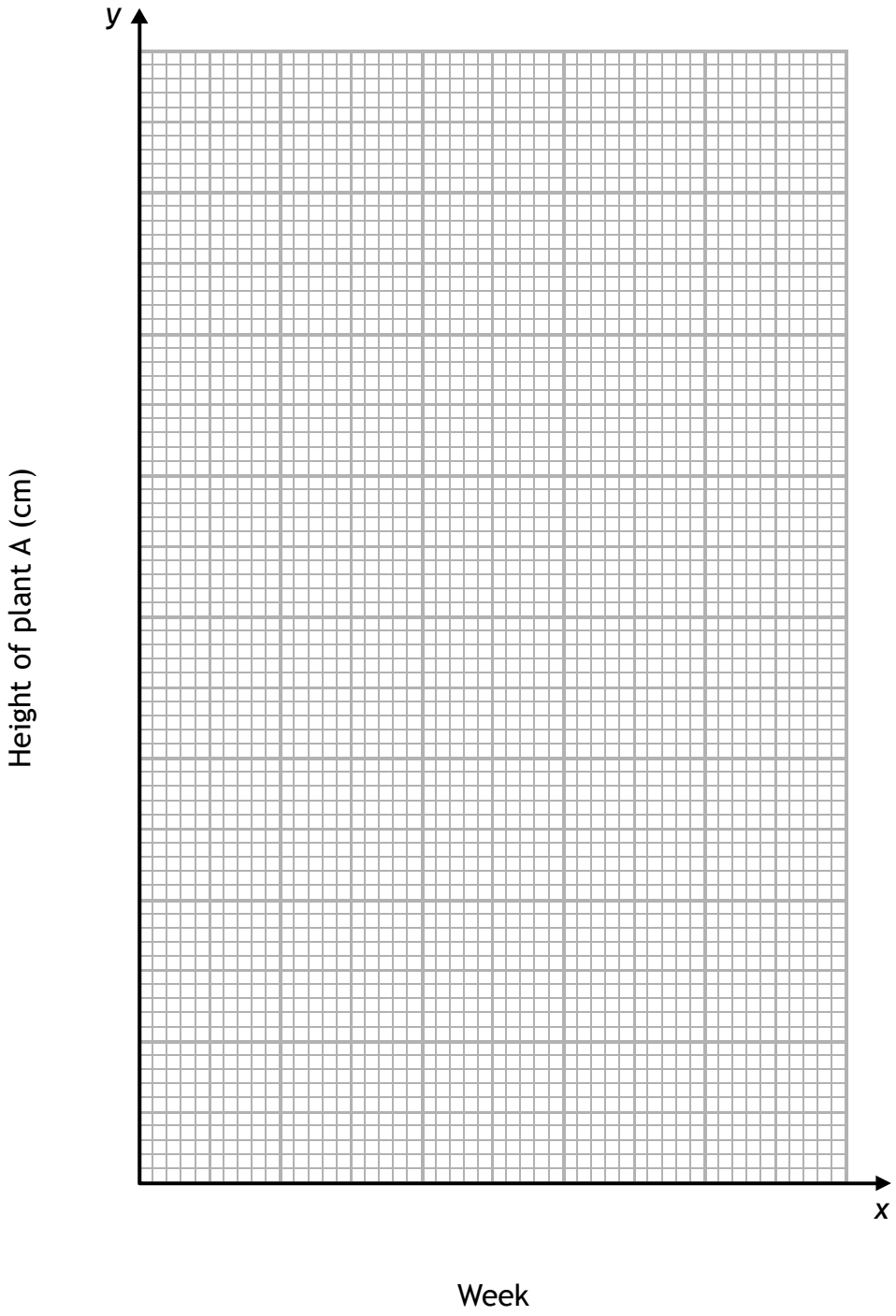

(Total for Question 33 is 3 marks)

34 (a) Expand

$$4(3x + 2)$$

.....

(1)

(b) Find the value of the expression

$$3a + 4b$$

when $a = 3$ and $b = 2$

.....

(1)

(Total for Question 34 is 2 marks)

35 Jason is writing number sequences.

His rule is:

Double the previous number then subtract 1

Fill in the missing numbers using this rule.

(a) 17 33 $\square$ 129

(1)

(b) $\square$ 15 29 57

(1)

(Total for Question 35 is 2 marks)

36 (a) Draw a line of symmetry on the regular pentagon.

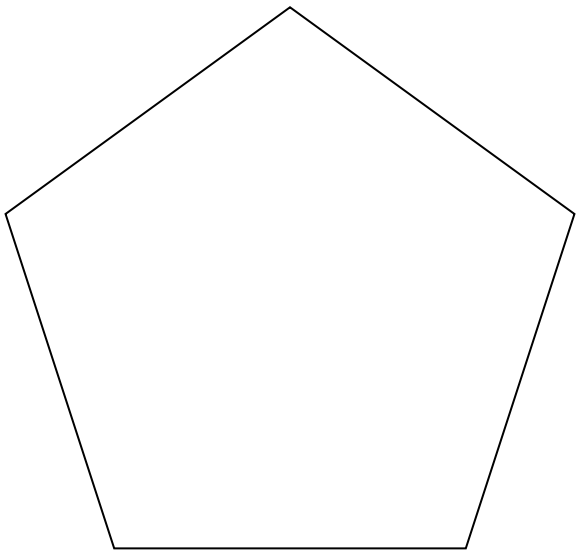

(1)

(b) Here are two identical shapes.

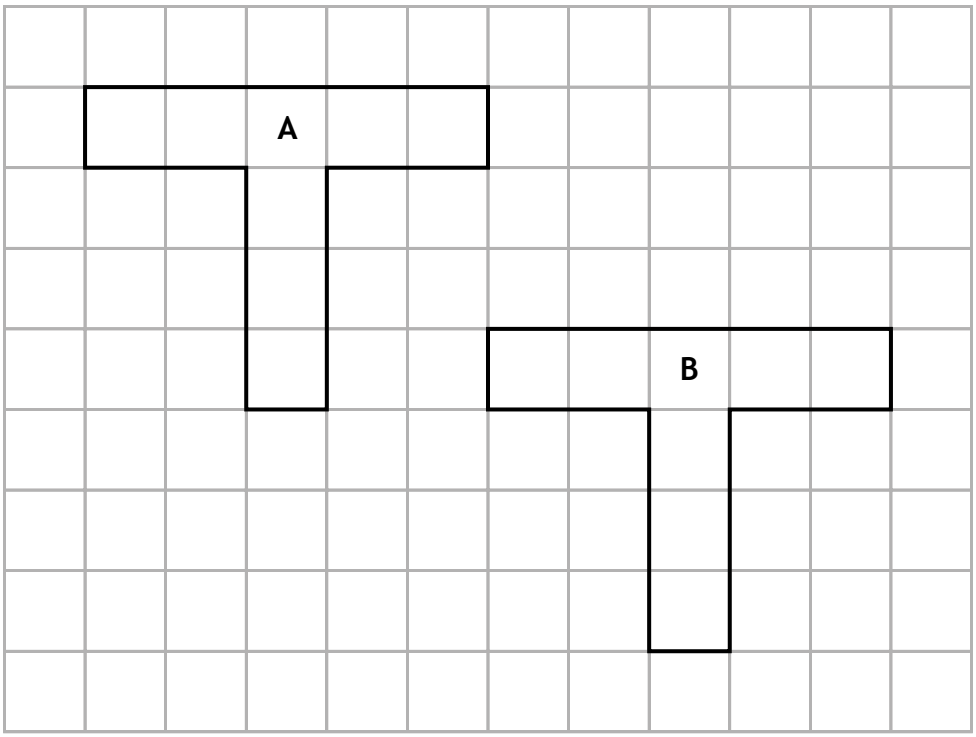

Describe the translation of Shape B onto Shape A.

.....

.....

(2)

(Total for Question 36 is 3 marks)

37 (a) Work out

$$4327 \times 34$$

You must show your working.

.....

(2)

(b) Work out

$$6732 \div 19$$

You must show your working.

.....

(2)

(Total for Question 37 is 4 marks)

38 Anil is making a fruit cocktail.

He needs 3 apples, 4 bananas and 2 pineapples.

Apples	$1.49 each
Bananas	$0.53 each
Pineapple	$2.35 each

Anil has $10

Work out if Anil has enough money to buy the fruit to make the fruit cocktail.

You must show your working.

(Total for Question 38 is 3 marks)

TOTAL FOR SECTION B IS 40 MARKS
TOTAL FOR PAPER IS 60 MARKS

BLANK PAGE

Mark scheme

Section A

Question number	Answer	Mark
1	D 500 cm	(1)

Question number	Answer	Mark
2	A 7	(1)

Question number	Answer	Mark
3	B 8	(1)

Question number	Answer	Mark
4	A Kite	(1)

Question number	Answer	Mark
5	C 2:55	(1)

Question number	Answer	Mark
6	C ten thousands	(1)

Question number	Answer	Mark
7	B 36	(1)

Question number	Answer	Mark
8	B 11	(1)

Question number	Answer	Mark
9	B	(1)

Question number	Answer	Mark
10	C 42 cm	(1)

Question number	Answer	Mark
11	D $7x + 4y$	(1)

Question number	Answer	Mark
12	C 81	(1)

Question number	Answer	Mark
13	B $11.51	(1)

Question number	Answer	Mark
14	B 18	(1)

Question number	Answer	Mark
15	D 400	(1)

Question number	Answer	Mark
16	A 3	(1)

Question number	Answer	Mark
17	D Radius	(1)

Question number	Answer	Mark
18	B $62\frac{3}{5}$	(1)

Question number	Answer	Mark
19	C 184 471 > 104 381	(1)

Question number	Answer	Mark
20	C $\frac{1}{16}$	(1)

Section B

Question number	Answer	Notes	Mark
21(a)	76 492	B1	(1)

Question number	Answer	Notes	Mark
21(b)	77 058	B1	(1)

Question number	Answer	Notes	Mark
22	7	B1	(1)

Question number	Answer	Notes	Mark
23	$150	M1 250 ÷ (3 + 2) (= 50) **or** Jon = 100 **or** Sam = 100 A1 cao	(2)

Question number	Answer	Notes	Mark
24(a)	1 2 4 8	B1	(1)

Question number	Answer	Notes	Mark
24(b)	3 6 12	B1	(1)

Question number	Answer	Notes	Mark
25(a)	AB and CD correctly marked	B1 correct sides identified. B1 correct (>, >>, <, <<, etc.) symbols used.	(2)

Question number	Answer	Notes	Mark
25(b)	150°	B1 Accept answer with no degree symbol.	(1)

Question number	Answer	Notes	Mark
26		B2 fully correct grid **or** B1 for 4 correct answers	(2)

X	3	8	6
6	18	48	36
5	15	40	30

Question number	Answer	Notes	Mark
27(a)	5	B1	(1)

Question number	Answer	Notes	Mark
27(b)	12	B1	(1)

Question number	Answer	Notes	Mark
28	30	B1	(1)

Question number	Answer	Notes	Mark
29(a)	$\frac{4}{10}$	B1	(1)

Question number	Answer	Notes	Mark
29(b)	$\frac{2}{3}$	B1	(1)

Question number	Answer	Notes	Mark
30(a)	37	B1	**(1)**

Question number	Answer	Notes	Mark
30(b)	0.53, 3.05, 3.5, 5.3	B1	**(1)**

Question number	Answer	Notes	Mark
31	2.1 kg	B1 correct conversion to 0.85 kg **or** 1 250 g B1 correct answer 2.1 kg	**(2)**

Question number	Answer	Notes	Mark
32(a)	(4, −2)	B1	**(1)**

Question number	Answer	Notes	Mark
32(b)	(−3, 2)	B1	**(1)**

Question number	Answer	Notes	Mark
33	Any suitable scale, starting from 0 in equal intervals	B1 Suitable linear scale. M1 correct plot of at least 4 points. A1 correct line graph.	(3)
	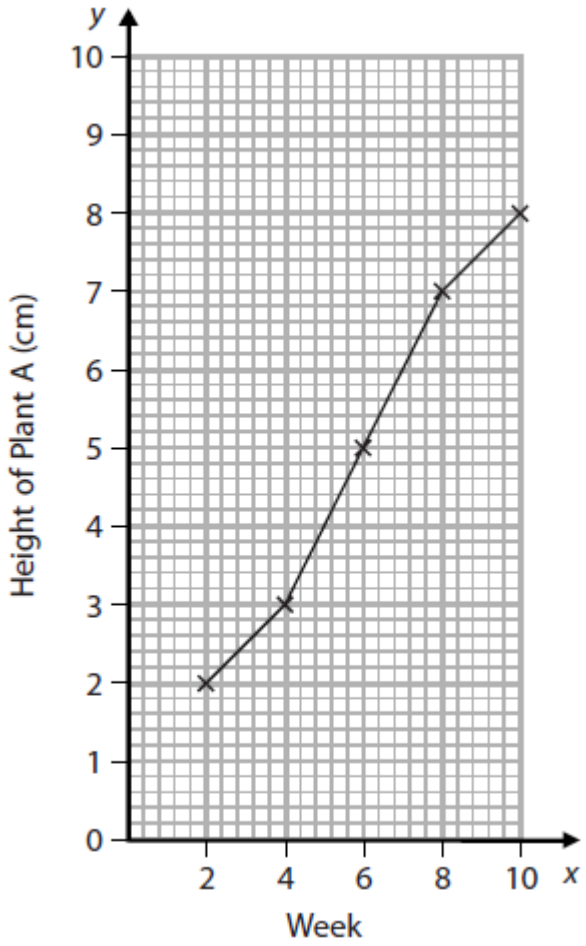		

Question number	Answer	Notes	Mark
34(a)	$12x + 8$	B1	(1)

Question number	Answer	Notes	Mark
34(b)	17	B1	(1)

Question number	Answer	Notes	Mark
35(a)	65	B1	(1)

Question number	Answer	Notes	Mark
35(b)	8	B1	**(1)**

Question number	Answer	Notes	Mark
36(a)	Line of symmetry 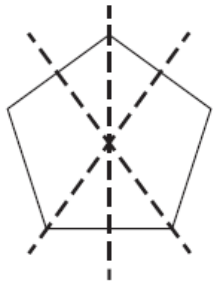	B1 any **one** line of symmetry.	**(1)**

Question number	Answer	Notes	Mark
36(b)	5 Left and 3 up oe	B2 for fully correct translation. **or** B1 for one correct.	**(2)**

Question number	Answer	Notes	Mark
37(a)	147 118	M1 for correct method to multiply with no PV error (accept arithmetic errors) **or** 129 810 and 17 308 seen, as a minimum (or jottings from another method). A1 to be awarded **only** if correct working methods seen. $\begin{array}{r} 4327 \\ \times \quad 34 \\ \hline 17308 \\ +\ 129810 \\ \hline 147118 \\ \hline \end{array}$	**(2)**

Question number	Answer	Notes	Mark
37(b)	354 r6 **or** $354\frac{6}{19}$ **or** 354.3 (15789)	M1 for correct method (short or long) with no PV errors (accept arithmetic errors) **or** 354 seen. A1 to be awarded **only** if correct working methods seen. Do **not** accept r $\frac{6}{19}$ $\begin{array}{r} 354 \text{ r}6 \\ 19\overline{)\,6\ 7^{10}3\ ^{8}2} \end{array}$ **or** $\begin{array}{r} 354.31 \\ 19\overline{)\,6\ 7\ 3\ 2\ \ \ 0\ 0} \\ -\ 5\ 7 \\ \hline 1\ 0\ 3 \\ 9\ 5 \\ \hline 8\ 2 \\ -\ 7\ 6 \\ \hline 6\ 0 \\ -\ 5\ 7 \\ \hline 3\ 0 \end{array}$ **or** $\begin{array}{r} 354.3\ (1{\cdot}57. \\ 19\overline{)\,6\ 7^{10}3\ ^{8}2\ {\cdot}\ ^{6}0\ (^{3}0\ldots} \end{array}$	**(2)**

Question number	Answer	Notes	Mark
38	1.49 × 3 (= 4.47) 0.53 × 4 (= 2.12) 2.35 × 2 (= 4.70) ‘4.47’ + ‘2.12’ + ‘4.70’ (= 11.29) ‘11.29’ − 10.00 (= 1.29) **Alternative** 10 − ‘4.47’ (= 5.53) ‘5.53’ − ‘2.12’ (= 3.41) Pineapple cost 4.70 so not enough money.	M1 1 correct answer **or** 3 correct methods. M1 $11.29 seen **or** *fully* correct method. A1 **No** and Anil needs another $1.29 **or** reference to both $11.29 and $10 Answer **No** can be implied by the working. Units are not required to gain full marks.	**(3)**

FOR INFORMATION ABOUT EDEXCEL, BTEC OR LCCI QUALIFICATIONS
VISIT QUALIFICATIONS.PEARSON.COM

PEARSON EDUCATION LIMITED. REGISTERED IN ENGLAND AND WALES NO. 872828
REGISTERED OFFICE: 80 STRAND, LONDON WC2R 0RL
VAT REG NO GB 278 537121

GETTY IMAGES: ALEX BELMONLINSKY

ISBN 978-1-4469-5231-3

Pearson
Edexcel